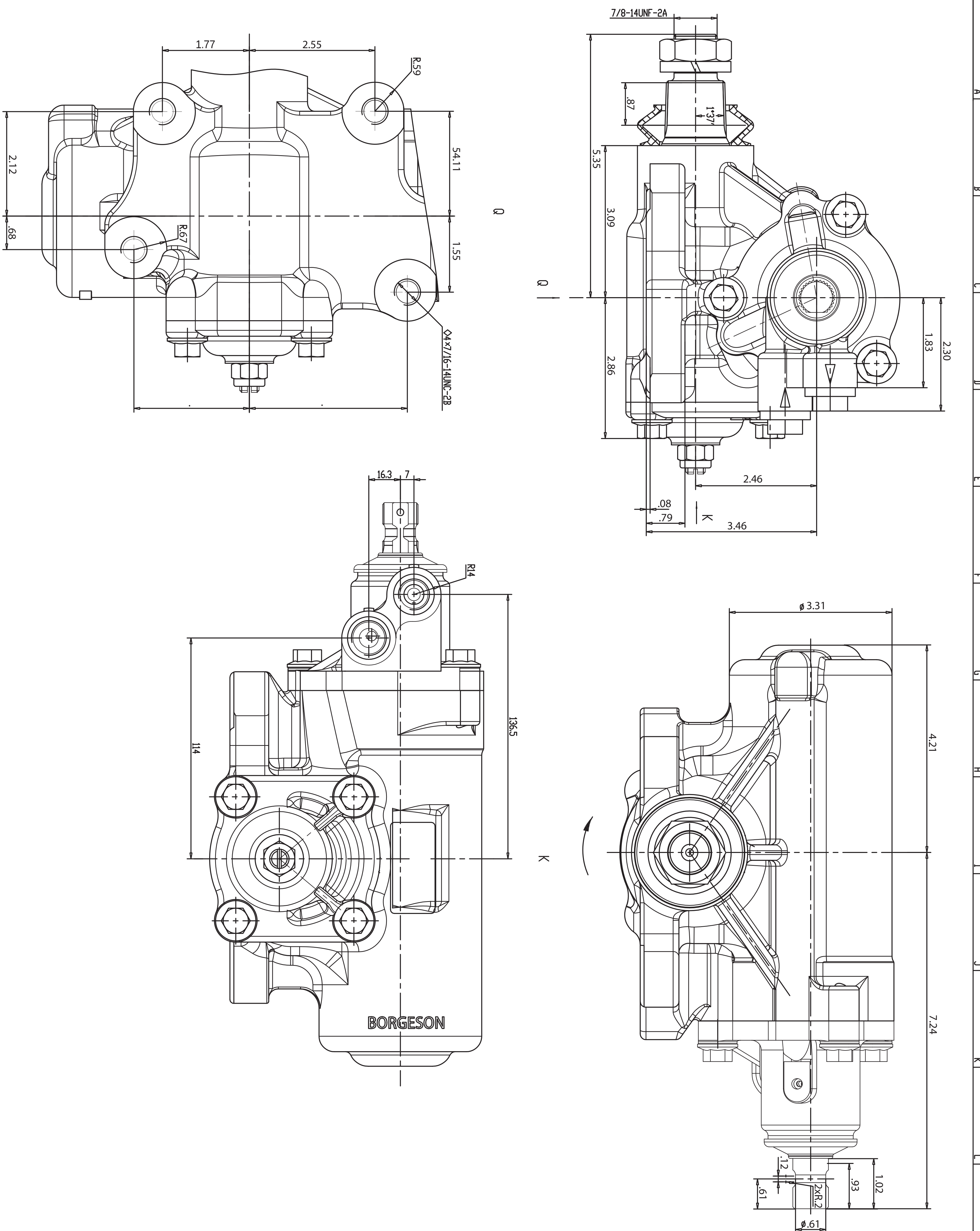

INSTALL
DRAWING

800132